louis poulsen

LP Nest

Poles

Photo: Jesper Ray

Weblink
2540

Design
Bystrup Architects

Concept
A uniform and round symmetric spread of light that is reflected from the ceiling and at its way down breaking through the pattern of the fixture and that way creating a play of light inside the fixture and making it "glow".

Finish
Aluminium coloured with textured surface or graphite with textured surface, powder coated.

Material
Frame/Louvre: Graphite with textured surface or aluminium coloured with textured surface, high pressure moulded aluminium. Top shade: Spun aluminium. Reflector: Anodised aluminium. Enclosure: Clear glass.

Mounting
Pole dimension: Ø 114.3mm. Terminal block: 1x3x2,5mm² (Class I) or 1x2x2,5mm² (Class II). Terminal block positioning: Under the fixturehead console. Ballast positioning: Upper Poletop.

Weight
Max. 8kg.

Class
Ingress protection IP66. Electric shock protection I w. ground, II w/o ground.

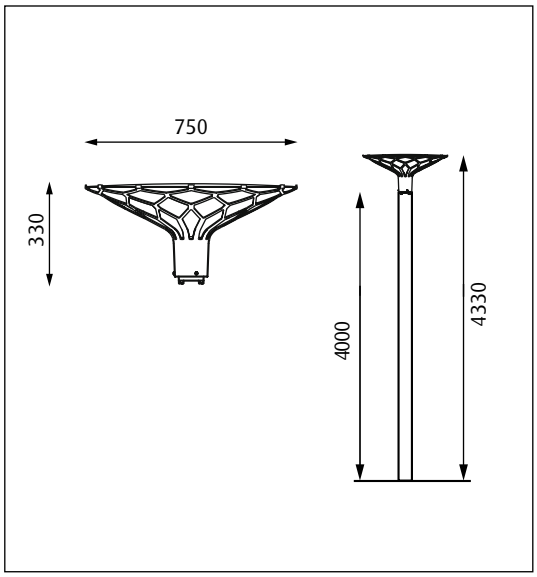

Prefix	Light source	Finish	Class
LPNEST-PT	1x150W HIT G12 HF 1x70W HIT G12 HF	ALU COL TEXT GRAPH TEXT	I II

Info notes:
Order pole separately.